HSF

NOTES:
Current Rating:1AMP
Contact Resistance:20mΩ max
Withstand Voltage:500V AC/DC
Insulation Resistance:1000MΩ min
Operation Temperature:−40℃ to +105℃

Contact Material:Phosphor Bronze
Contact plating:Au or Sn over Ni
Insulator Material:PBT+30%GF(UL94V−0)

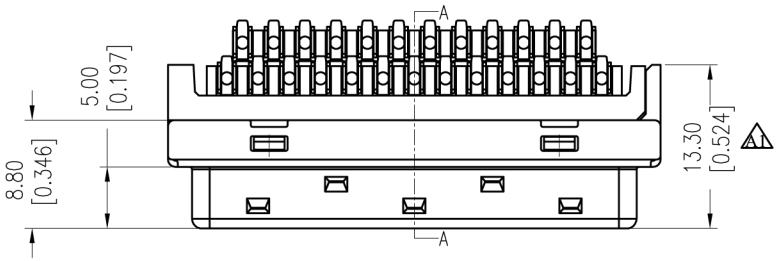

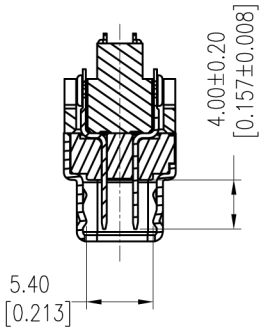

SECTION:A−A

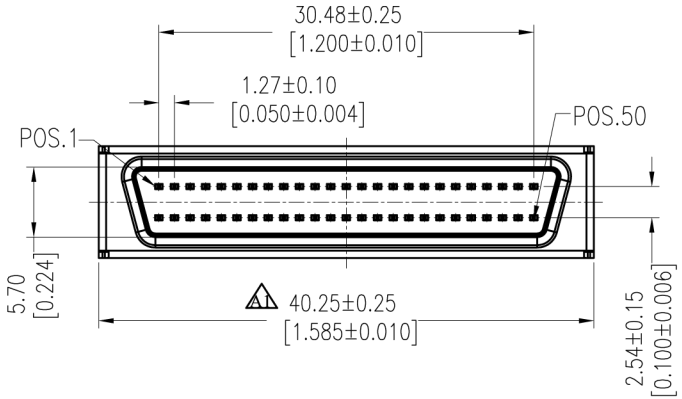

Ordering Information

6310 - 050 S S SX M N A 01

- 050: No.of Pins 50Pin
- SX: Contact Plating S4=15u"Gold/Tin S5=30u"Gold/Tin
- A: Packing A=Tray

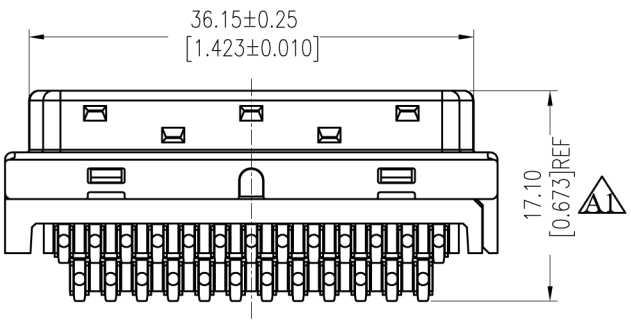

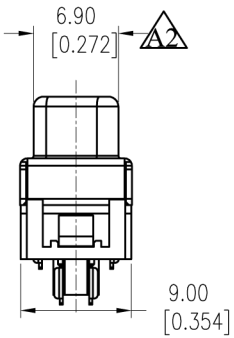

REV	DATE	MODIFICATION DESCRIPTION	CHANGE
A2	2013/01/26	Modify The Dimension 7.00→6.90	
A1	2012/04/19	MODIFY	——
A0	2012/03/19	NEW	——

OPERATION	
X.X	±0.40
X.XX	±0.25
X.XXX	±0.15
Angle	± 3°
DIM	TOL

DRAW	Tsingsn	DATE	2013/01/26
CHECK		DATE	
APPROVE		DATE	

SCALE	FIT
UNIT	mm inch
SIZE	A4
SHEET	1/1
PROJ.	

PART NO. 6310-050SSSXMNA01

TITLE: 1.27x2.54 SCSI 50P Male Soldering Type

Customer NO.

上海回峰电子科技有限公司
Shanghai Hui Feng Electronic Technology Co., Ltd.
电话：021-67150229
传真：021-67150251
企业邮箱：huifeng_dzkj@163.com
公司网站：www.huifeng-china.com