HSF

TECHNICAL SPECS:
Current Rating:1.0AMP
Contact Resistance:10mΩ Max
Dielectric Strength: Min 1000VRMS
Mechanical Life: Min 500 cycles
Operation Temperature:−40°C to +105°C

Sleeve:Brass CuZn36Pb3(C36000)
Contact plating:Au over Ni
Connecting Pin:ø0.41mm
Insulator Material:PPS+30%G.F(UL94V−0)

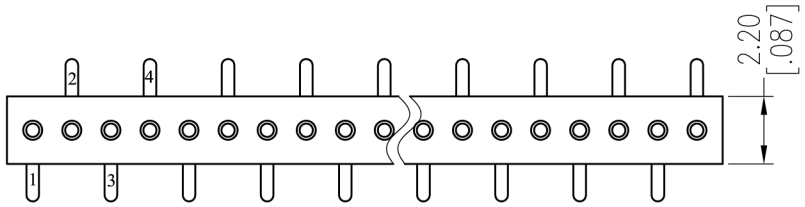

TYPE 1

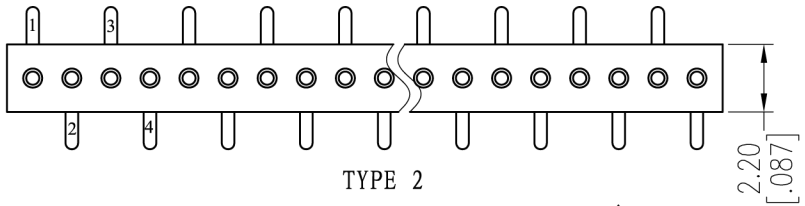

TYPE 2

Recommended P.C.B Layout(Top Side)
(PCB BOARD TOLERANCE±0.05)

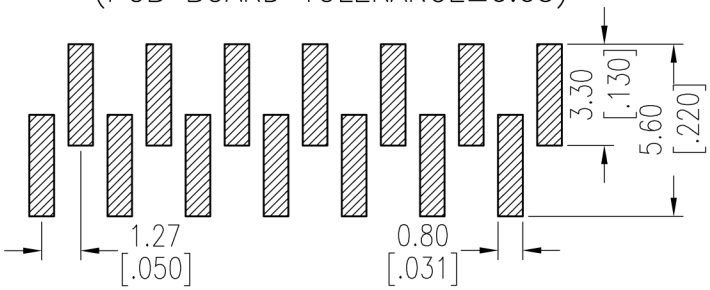

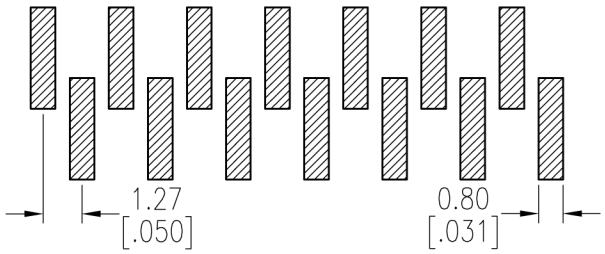

Ordering Information

3514-221 XX M XX 081 X X

- No. of Pin: 2~50PIN
- Contact Plating: G0=Gold Flash, G3=10u"Gold, G4=15u"Gold, G5=30u"Gold
- Packing: T=Tube, A=Tray, R=Tape&Reel
- Series No.: 1=Type 1, 2=Type 2

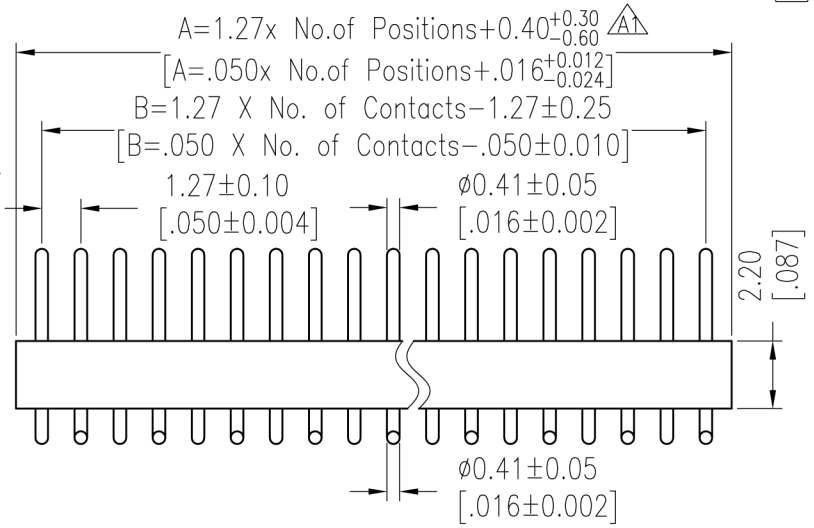

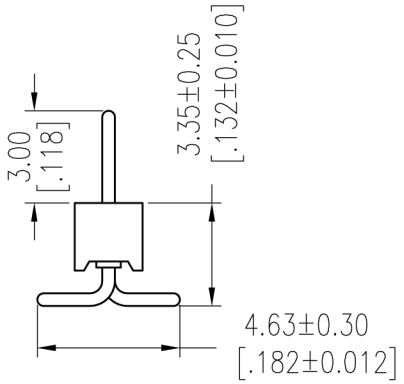

Item	Pitch	Mating
Standard	1.27	3524
Alternate		

REV	DATE	MODIFICATION DESCRIPTION	CHANGE
A1	2013/05/21	modify drawing	------
A0	2012/10/22	NEW	------

OPERATION	
X.X	±0.40
X.XX	±0.25
X.XXX	±0.15
Angle	± 3°
DIM	TOL

DRAW	wang	DATE	2013/05/21
CHECK		DATE	
APPROVE		DATE	

SCALE	FIT
UNIT	mm
SIZE	A4
SHEET	1/1
PROJ.	

PART NO. 3514-221XXMXX081XX

TITLE: 1.27mm MACHINED PIN HEADER SINGLE ROW 180° SMT H=2.20 L=8.1

Customer NO.

上海回峰电子科技有限公司
Shanghai Hui Feng Electronic Technology Co., Ltd.
电话：021-67150229
传真：021-67150251
企业邮箱：huifeng_dzkj@163.com
公司网站：www.huifeng-china.com